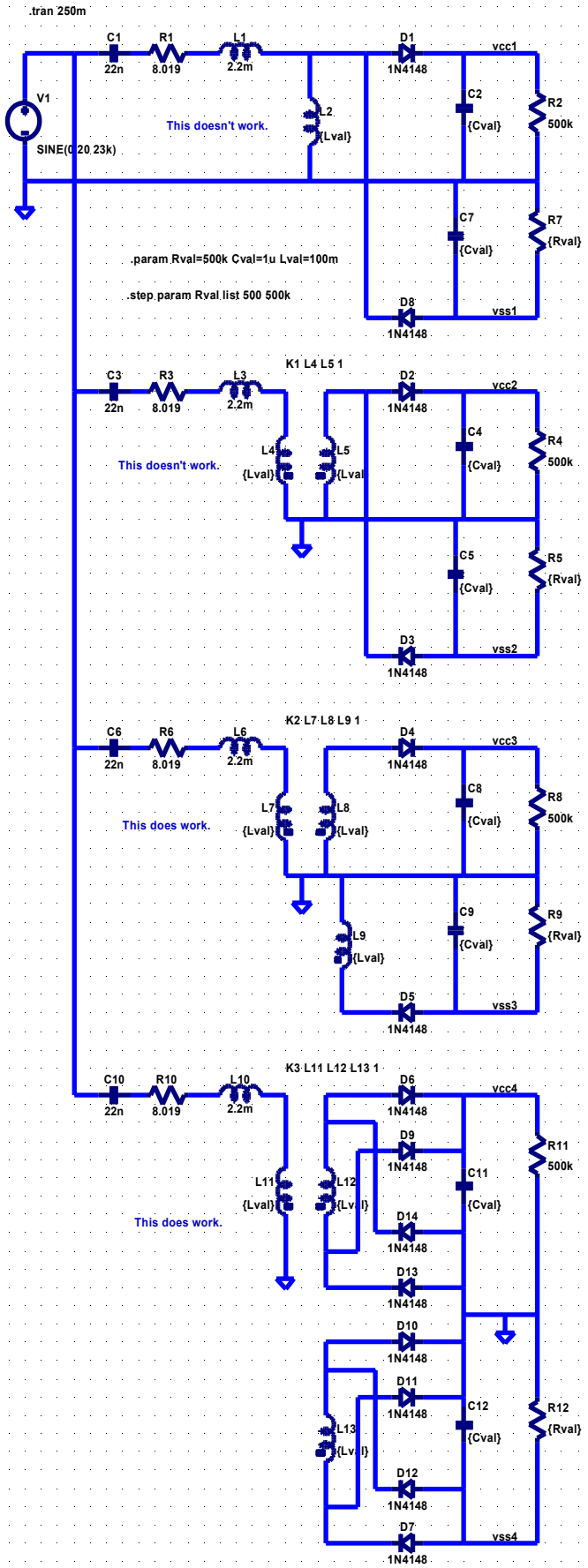
.tran 250m
C1
22n
R1
8.019
L1
2.2m
D1
1N4148
vcc1
V1
SINE(0 20 23k)
This doesn't work.
L2
{Lval}
C2
{Cval}
R2
500k
C7
{Cval}
R7
{Rval}
.param Rval=500k Cval=1u Lval=100m
.step param Rval list 500 500k
D8
1N4148
vss1
K1 L4 L5 1
C3
22n
R3
8.019
L3
2.2m
D2
1N4148
vcc2
This doesn't work.
L4
{Lval}
L5
{Lval}
C4
{Cval}
R4
500k
C5
{Cval}
R5
{Rval}
D3
1N4148
vss2
K2 L7 L8 L9 1
C6
22n
R6
8.019
L6
2.2m
D4
1N4148
vcc3
This does work.
L7
{Lval}
L8
{Lval}
C8
{Cval}
R8
500k
L9
{Lval}
C9
{Cval}
R9
{Rval}
D5
1N4148
vss3
K3 L11 L12 L13 1
C10
22n
R10
8.019
L10
2.2m
D6
1N4148
vcc4
D9
1N4148
R11
500k
L11
{Lval}
L12
{Lval}
C11
{Cval}
This does work.
D14
1N4148
D13
1N4148
D10
1N4148
D11
1N4148
C12
{Cval}
R12
{Rval}
L13
{Lval}
D12
1N4148
D7
1N4148
vss4